CAMBRIDGE

SPIRA 1

Published at 4 September 2026. Last revised at 14 Oktober 2026

Table of Contents

- Einleitung
- Was ist im Lieferumfang des Spira enthalten?
- Draufsicht
- Rückansicht
- Einrichtung des Spira
- Verbindung herstellen
- Bedienungsanleitung
- Fehlerbehebung
- Technical Specifications

Introduction

This guide is designed to make installing and using this product as easy as possible. Information in this document has been carefully checked for accuracy at the time of printing; however, Cambridge Audio's policy is one of continuous improvement, therefore design and specifications are subject to change without prior notice. This document contains proprietary information protected by copyright. All rights are reserved. No part of this manual may be reproduced by any mechanical, electronic or other means, in any form, without prior written permission of the manufacturer. All trademarks and registered trademarks are the property of their respective owners.
© Copyright Cambridge Audio Ltd document.

Other trademarks and trade names are those of their respective owners.

For upcoming news on future products, software updates and exclusive offers, make sure you register your product at http://www.cambridgeaudio.com/register

What's included with the Spira?

Inside the box of your Spira you will receive:

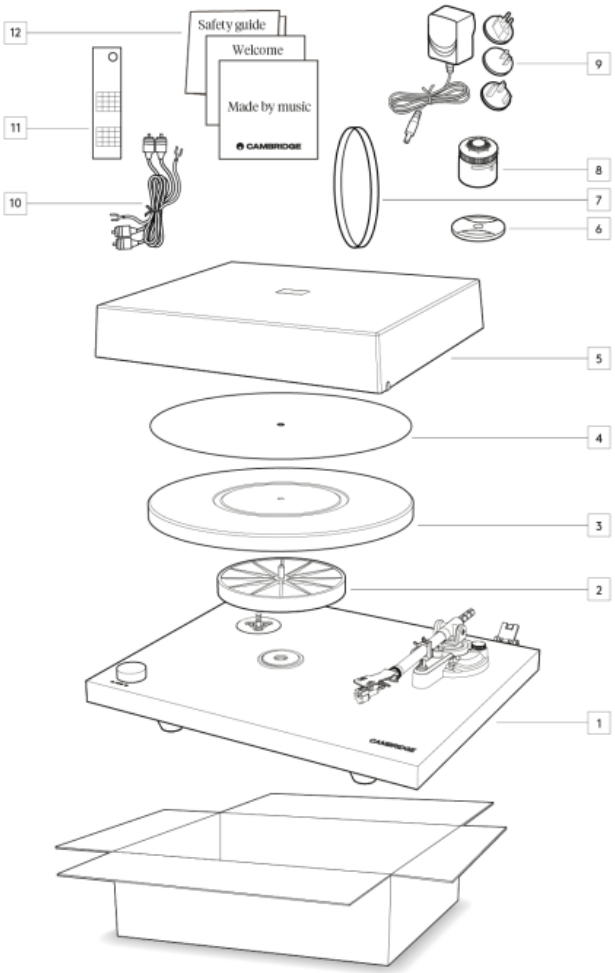

1. Spira Belt-Drive Turntable
2. Turntable Hub
3. Turntable Platter
4. Slipmat
5. Dust cover
6. Single Adapter
7. Drive Belt
8. Counterweight
9. Power Adaptor with Switchable Plugs.
10. RCA Cable with grounding
11. Protractor card
12. Welcome card/QSG /Safety guide/brand booklet

Top view

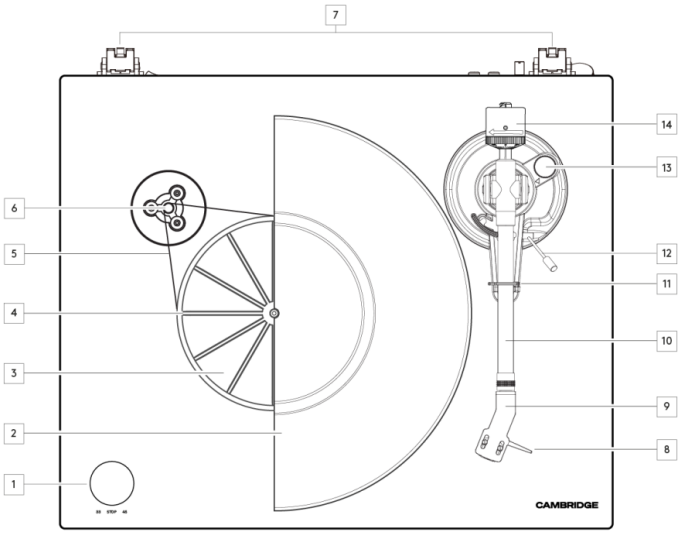

1. Speed/Stop Knob: Stop and Speed Selection Knob - Use to start or stop platter rotation at either 33, or 45 RPM.
2. Turntable Platter
3. Turntable Hub
4. Turntable Spindle
5. Drive Belt
6. Drive Pulley
7. Lid Hinge
8. Moving Magnet Cartridge
9. Removable Headshell
10. Tonearm
11. Tonearm Rest and Clamp - Used to secure the tonearm when not in use.
12. Tonearm Lift Lever - Used to gently lift and lower the tonearm.
13. Anti-Skating Dial - Allows adjustment of the anti-skate function.
14. Tonearm Counterweight - Used to adjust the stylus tracking force.

Rear view

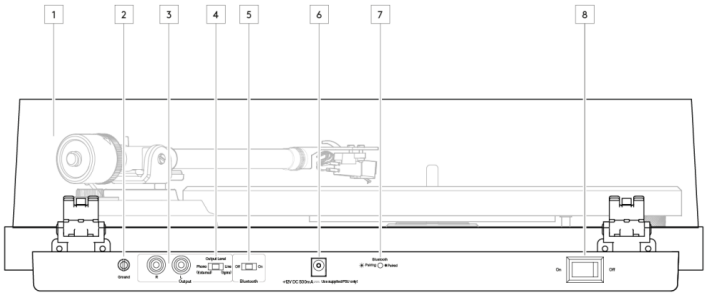

1. Lid
2. Ground Connection Screw
3. Signal Output Sockets
4. Output Level Switch – Select between line level, or phono level output
   Line(Spira): With the switch set to ‘Line’ the internal phono stage will be used
   Phono: With the switch set to ‘Phono’, an external phono stage will need to be used
5. Bluetooth Switch
6. DC12V Power Socket
7. Bluetooth LED
8. Power On/Off Switch

Setting up the Spira

Once you have unboxed your turntable, please remove all the separate components in preparation for assembly.

1. Install the drive belt around the motor, ensuring that it sits correctly on the spindle.

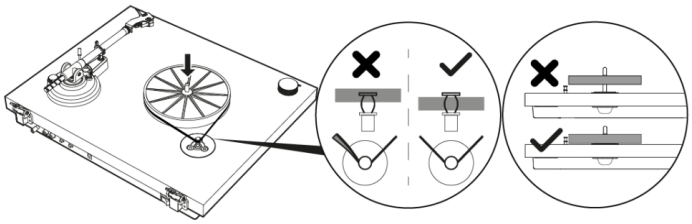

2. Place the slip mat and the platter on the turntable

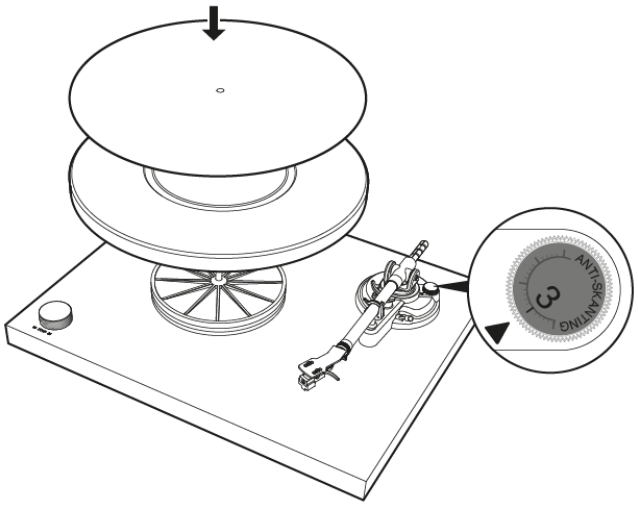

3. Push and rotate the counterweight onto the end of the tonearm

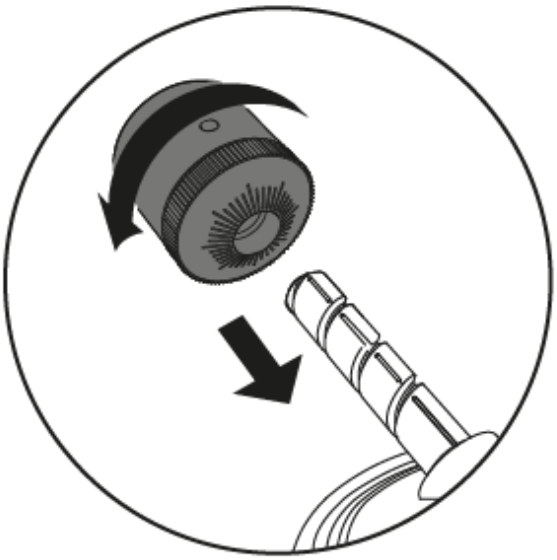

4. Release the tonearm from its rest and remove the stylus guard.

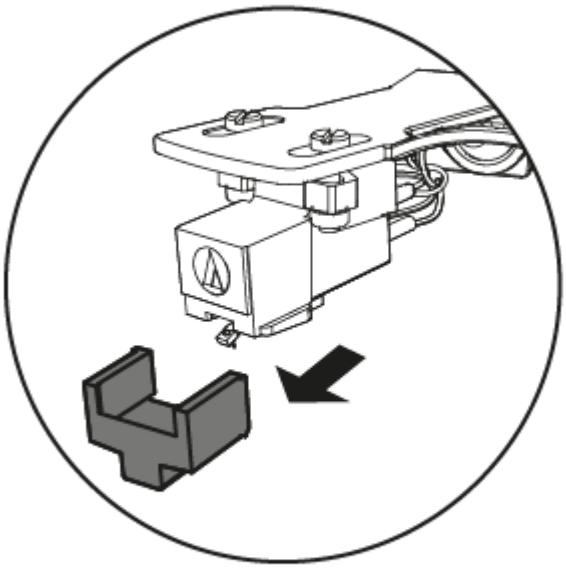

5. Adjust the counterweight

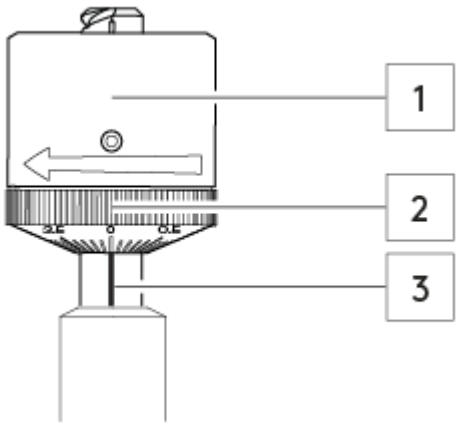

1. Counterweight
2. Tracking force scale ring
3. Centre line

a. Adjust the counterweight until the tonearm is balanced level
b. Hold the Counterweight without moving it and gently rotate the Tracking force scale ring until the zero “0” is in line with black line on the rear of the tonearm.
c. Rotate the counterweight counter clockwise (seen from the front) to adjust the tracking force according to the cartridge manufacturer’s recommendations (3-3.5g)

Note: You can use the set screw on the counterweight to adjust the level of friction between the counterweight and tonearm. There should be some friction between them, to ensure the tracking force stays constant during playback.

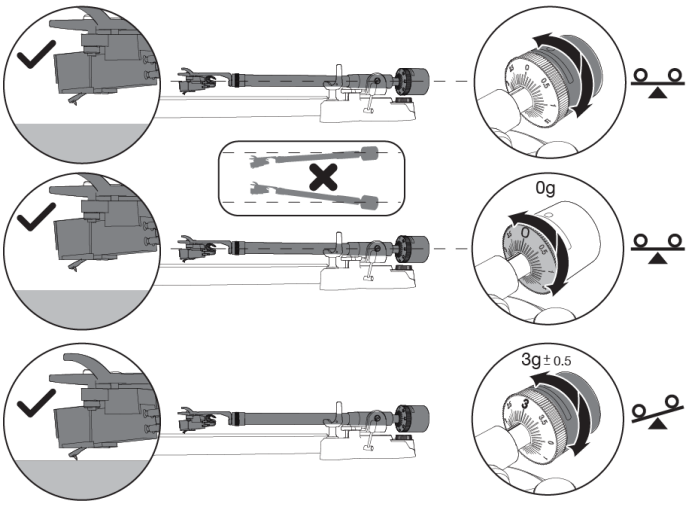

Ensuring that the tracking force is set correctly is important to the performance of your turntable and helps to minimize damage to your records. This process requires care and patience to balance the cartridge properly.

Set the anti-skating dial to ‘3’, matching the cartridge tracking force.

6. **(Optional, the cartridge comes pre-aligned out of the box)** Place the protractor over the record spindle, gently place the needle on the cross. Move the cartridge backwards or forwards until the headshell is parallel with the lines. Ensure that the cartridge is squarely aligned in the headshell and then tighten the screws

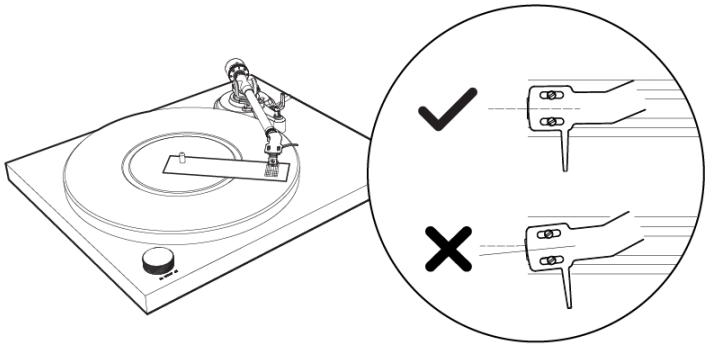

7. Attach the lid.

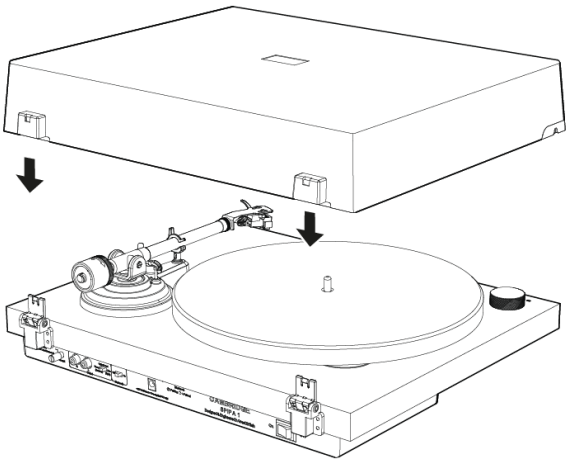

Getting connected

Line Level Connection

1. Switch the 'output level switch' to 'line'.

2. Using high-quality RCA interconnects, connect the audio output of the Spira to a line-level input on your amplifier.

Note: Do not connect to an external phono-stage, or phono-level input with the turntable set to 'line'.

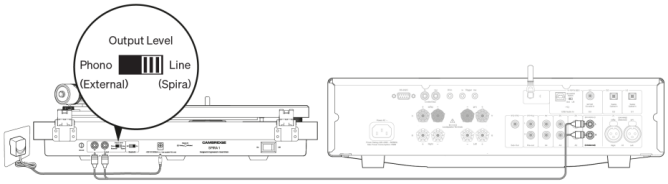

Phono Connection

1. Switch the 'output level switch' to 'phono'.

2. Connect a ground lead to the ground connection screw on the Spira, and the equipment that it is being connected to.

3. Using high-quality RCA interconnects, connect the audio output of the Spira to the phono input of your external phono-stage, or amplifier.

Note: Do not connect to a line-level input with the turntable set to output at phono-level.

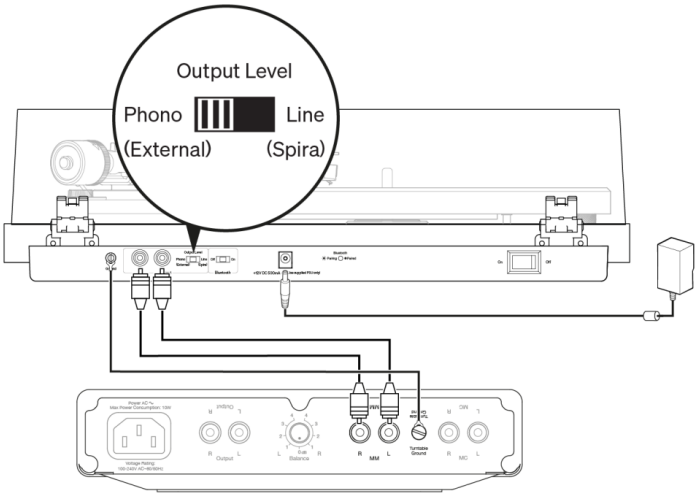

Note: Do not switch between Line and Phono with the turntable powered on. Ensure the turntable is powered off before changing this switch position.

Bluetooth Wireless Connection

The Spira has a Bluetooth transmitter to send the sound to a Bluetooth speaker or headphone wirelessly.

1. Turn the Bluetooth switch On.

2. Turn on your Bluetooth speaker or headphone and make sure they are in pairing mode.

3. This unit will connect to the closest Bluetooth, if a Bluetooth device is already connected, the blue LED light is solid.

4. To disconnect the pairing, please set the Bluetooth to Off, or turn off the Bluetooth speaker or headphone.

Note: This product has a 2.4GHz transmission function, you cannot receive any Bluetooth sound on it: this means that you can transmit wirelessly a Bluetooth sound signal to an external device like a Bluetooth speaker, Bluetooth headphone, audio system with Bluetooth reception.

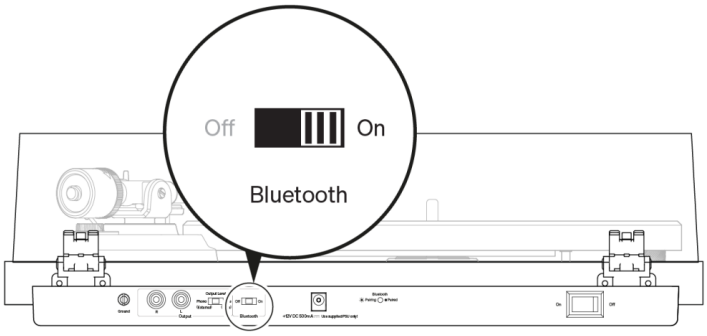

Bluetooth LED Status

Fast flashing – In pairing mode.

Solid – Paired to a device.

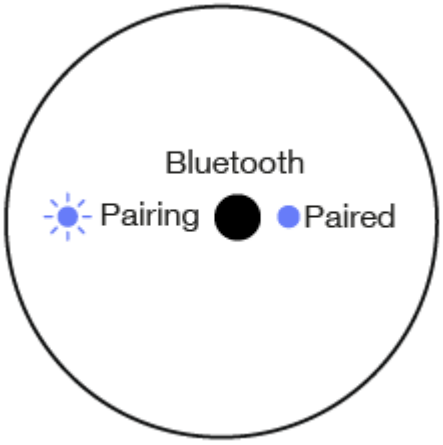

Operating instructions

Playing Records

1. Place your record over the spindle and onto the platter, then turn on the power switch on the rear panel.
2. Rotate required platter rotation speed knob (33 or 45) on the top panel.
3. Raise the tonearm by moving the lift lever towards the rear of the turntable.
4. Position the tonearm over the desired location (groove) on the record.
5. Lower the tonearm slowly by moving the lift lever towards the front of the turntable.

Ending Play

1. Lift the tonearm with the lift lever.
2. Move the tonearm back onto the tonearm rest.
3. Secure the tonearm with the tonearm clamp.
4. Rotate the platter speed knob to stop the platter rotation.
5. Turn off the power switch

Note: The stylus wears over time, and should be replaced every 300hrs of play time. Please ensure to inspect and clean the stylus regularly to ensure clean, and steady playback. The official replacement stylus is an ATN3600LC, you can also fit the ATN3600LE for a slight upgrade in sound quality.

Troubleshooting

No sound through both channels.

- Check that the amplifier is turned on.
- Ensure that the correct input source is selected on the amplifier.
- Confirm that all connections between the amplifier and turntable are secure.

- Check that the stylus is making sufficient contact with the record.
- Check that the connections between the amplifier and loudspeakers are secure.
- Check the Speed/STOP Knob is set to 33 or 45 to start playing.

There is a distorted or inconsistent sound.

- Check the setting of the internal preamp and ensure that the turntable is connected to the correct amplifier input.
- Check that the record is playing at the correct speed.
- Confirm that your tracking force is set correctly using a stylus force gauge. Match the anti-skate value to this measurement,
- Check the ground wire connection to be solid if output level switch is set to 'Phono.
- Check the condition of the record and stylus.
- Ensure that the turntable is sat level, and isn't picking up any external vibrations.

Stylus skips across the record.

- Check that the stylus guard has been removed.
- Confirm that your tracking force is set correctly using a stylus force gauge. Match the anti-skate value to this measurement.
- Check the condition of the record.
- Ensure that the turntable is sat level and isn't picking up any external vibrations.
- Check the condition of the stylus.

Turntable will not connect to a Bluetooth playback device.

- Ensure that the turntable and device are not too far apart.
- Check that the device is in pairing mode.
- Check that the turntable is in pairing mode.

Turntable is connecting to an incorrect Bluetooth playback device.

- Disable/switch off all other Bluetooth devices.

Inconsistent sound or playback whilst listening via Bluetooth.

- Check that the Bluetooth signal is not being blocked or interrupted.
- Bring the Bluetooth playback device closer to the turntable.

Technical Specifications

Type

Manual

Drive Type

Belt drive

Speeds

33⅓ / 45 RPM

Speed control

Electronic Dial switch (no manual belt adjustment needed)

Wow and Flutter

< 0.15%

Rotation Speed Variation

+3%/-2%

Motor type

DC

Cartridge

Audio-Technica AT3600L

Recommended tracking force

3-3.5g

Tonearm

Aluminium, straight, with removable headshell

Effective tonearm length

8.6” (218.5mm)

Effective mass

7.3g

Anti-skate

Adjustable

Platter

1.8kg high-mass steel (with sub-platter design)

Platter bearing

Ball

Mat

Felt

Plinth

MDF

Feet

Isolating rubber

Built-in RIAA Preamp

Yes

Signal to noise

60dB

USB Output

No

Bluetooth

Yes

Dust Cover

Yes (removable)

Included Accessories

Power supply, RCA cable, dust cover, protractor, single adapter

Product Dimensions (W x D x H):

41.8cm x 34.3cm x 12.2cm

Dimensions incl. packaging (H x W x L):

50cm x 42.8cm x 19.2cm

Net weight

5.95KG

Gross weight

8.2KG

Power consumption

5W

Available Finishes

Black, White, Blue, Green, Orange